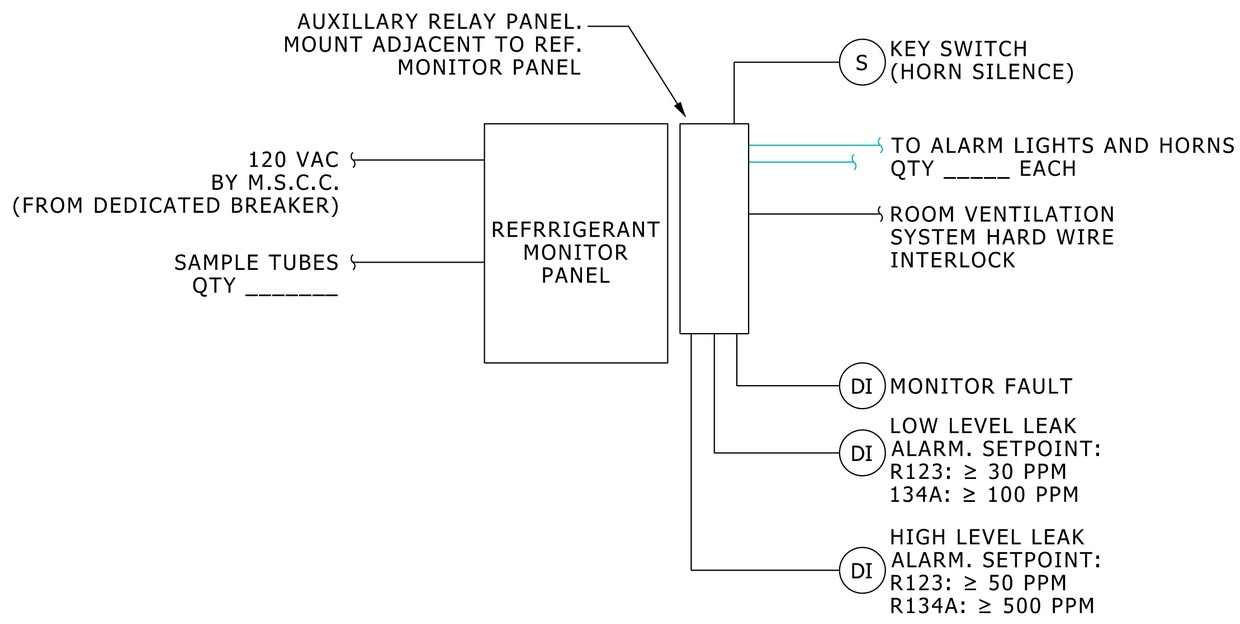

REFRIGERANT MONITOR CONTROL DIAGRAM

NO SCALE D 15635 001 0815

SEQUENCE OF OPERATION:

A. DETECTION OF LOW LEVEL REFRIGERANT LEAK: ALARM LIGHTS INSIDE AND OUTSIDE THE MACHINE ROOM (BUT NOT THE HORNS) SHALL ACTIVATE AND A "LOW" REFRIGERANT LEAK ALARM SHALL BE GENERATED AT THE BAS.

B. DETECTION OF HIGH LEVEL REFRIGERANT LEAK: ALARM LIGHTS AND HORNS INSIDE AND OUTSIDE THE MACHINE ROOM SHALL ACTIVATE, THE MACHINE ROOM VENTILATION SYSTEM SHALL BE PLACED INTO EMERGENCY EXHAUST/VENTILATION MODE, AND A 'HIGH" REFRIGERANT LEAK ALARM SHALL BE GENERATED AT THE BAS.

C. DETECTION OF A REFRIGERANT MONITOR FAULT CONDITION OR LOSS OF POWER TO MONITOR PANEL: A COMMON ALARM SHALL BE GENERATED AT BAS INDICATING A FAULT OR LOSS OF POWER.

D. IT SHALL BE POSSIBLE TO SILENCE ALL HORNS DURING AN ALARM, WITH A MOMENTARY 2-POSITION KEYED SWITCH LOCATED OUTSIDE THE MACHINE ROOM. HOLDING THE KEYED SWITCH MOMENTARILY IN THE "SILENCE" POSITION AND THEN RELEASING IT SHALL SILENCE ALL HORNS UNTIL THE CONDITION THAT CAUSED THE ALARM, AS DETECTED BY THE REFRIGERANT MONITOR, HAS ABATED. ONCE THE CONDITION THAT CAUSED THE ALARM CLEARS AND THE MONITOR PANEL IS RESET, THE HORN SILENCE FUNCTION SHALL AUTOMATICALLY RESET.

E. ALARMS SHALL BE LATCHED, AND SHALL BE RESETTABLE VIA A SWITCH INSIDE THE REFRIGERANT MONITOR PANEL ONCE THE CONDITION THAT CAUSED THE ALARM HAS ABATED.

GENERAL NOTES:

1. INSTALL REFRIGERANT MONITOR, SENSING TUBES, MULTIPOINT SEQUENCERS, REMOTE RELAY MODULES, ETC. PER REFRIGERANT MONITOR MANUFACTURER'S RECOMMENDATIONS.

2. PROVIDE MOMENTARY KEYED SWITCH, ADDITIONAL RELAYS, ETC. AS REQUIRED TO MEET THE SEQUENCE OF OPERATION. ROUTE ALL DDC POINTS THROUGH AND LOCATE ALL RELAYS AND RELATED COMPONENTS IN AN AUXILIARY PANEL MOUNTED ADJACENT TO THE REFRIGERANT MONITOR.

3. MOUNT THE MONITOR PANEL 5'-6" AFF, INSIDE THE MACHINE ROOM AT THE LOCATION INDICATED ON THE PLANS. IF THE LOCATION IS NOT INDICATED, MOUNT INSIDE AND NEAR THE MAIN ENTRY DOOR TO THE ROOM.

4. LOCATE ALARM LIGHTS, HORNS, AND SAMPLE TUBE TIPS AT THE LOCATIONS INDICATED ON THE PLANS. MOUNT SAMPLE TIPS AT LOCATIONS THAT ALLOW SENSING A LEAK, DO NOT INSTALL IN DEAD-AIR LOCATIONS. LIGHTS, SIGNS AND HORNS SHALL BE EASILY VISIBLE FROM THE FLOOR.

5. ALARM LIGHTS AT THE EXTERIOR SIDE OF EACH MACHINE ROOM ENTRANCE DOOR SHALL BE FLASHING BLUE LED TYPE, MINIMUM 4" DIAMETER DOME.

6. ALARM LIGHTS INSIDE MACHINE ROOMS SHALL BE STROBE TYPE WITH BLUE LENS, APPROXIMATELY 5" HIGH LENS.

7. PROVIDE HORNS ADJACENT TO ALL WARNING LIGHT LOCATIONS. THE HORN VOLUME (MEASURED AT 10 FEET) SHALL BE ADJUSTABLE BETWEEN 85 TO 100 DB.

8. ADJUST HORN OUTPUT TO BE DISTINCTLY AUDIBLE ABOVE NORMAL BACKGROUND NOISE BUT NOT BE EXCESSIVELY LOUD.

9. PROVIDE MINIMUM 3/16" I.D. RIGID COPPER OR STAINLESS STEEL TUBING WITH COMPRESSION JOINTS FOR SENSING AND EXHAUST TUBES. PROVIDE STAINLESS STEEL TUBING FOR AMMONIA REFRIGERANT DETECTION. INSTALL END-OF-LINE FILTERS SUPPLIED BY THE REFRIGERANT MONITOR MANUFACTURER.

10. PROVIDE PHENOLIC PLASTIC SIGNS, MINIMUM 1/2" HIGH WHITE ENGRAVED LETTERS ON RED BACKGROUND, AT EACH LIGHT/HORN LOCATION, AND AT THE REFRIGERANT MONITOR PANEL.

    NOMENCLATURE SHALL BE AS FOLLOWS:

    LIGHT AND/OR HORN INDICATE REFRIGERANT DETECTION ALARM.
    UNAUTHORIZED PERSONNEL STAY OUT OF MACHINE ROOM
    REPORT ALARM TO PLANT OPERATIONS CALL CENTER (734)-647-2059

    FOR U-M HOSPITAL PROJECTS:

    LIGHT AND/OR HORN INDICATE REFRIGERANT DETECTION ALARM.
    UNAUTHORIZED PERSONNEL STAY OUT OF MACHINE ROOM
    REPORT ALARM TO SYSTEMS MONITORING (734)-936-7521

11. MECHANICALLY FASTEN SIGNS TO WALLS OUTSIDE OF MACHINE ROOM, HANG FROM CHAINS INSIDE MACHINE ROOM. OBTAIN IN-FIELD APPROVAL FROM OWNER'S REPRESENTATIVE OF THE EXACT MOUNTING LOCATION OF ALL SIGNAGE.

12. MOUNT THE KEYED SWITCH TO SILENCE THE HORNS OUTSIDE AND ADJACENT TO THE MAIN ENTRY DOOR TO THE MACHINE ROOM. LABEL SWITCH "REFRIGERANT ALARM SILENCE SWITCH". THE KEYED SWITCH (SIMILAR TO BEST MODEL 1W7) SHALL BE CORED FOR A U-M MACHINE ROOM BEST LOCK "BA" KEY - FOR HOSPITAL PROJECTS, BEST LOCK "1W5" KEY. LABEL TO BE ENGRAVED PLASTIC IN COMPLIANCE WITH 230900.

13. ALL DEVICES EXTERIOR TO THE MACHINE ROOM SHALL BE MOUNTED IN RECESSED ELECTRICAL BOXES (BOX FRONT EDGE FLUSH WITH WALL).

REVISION HISTORY:
DATE EXPLANATION
08/04/15 Control Diagram Created - PS

REFERENCED DETAILS/SCHEDULES:
XXXX XXXX
XXXX XXXX
XXXX XXXX
XXXX XXXX
ADDITIONAL INFORMATION:
XXXX
XXXX
XXXX
XXXX
MODULES: X

DESIGNER NOTES:

1. FILL IN QUANTITY OF LIGHTS HORNS AND SAMPLE TUBES.
2. REVISE REFRIGERANT TYPE AND ALARM LEVEL, IF REQUIRED.
3. INDICATE THE LOCATION OF THE REFRIGERANT MONITOR PANEL (INSIDE MACHINERY ROOM NEAR DOOR), LIGHTS HORNS, KEYED SWITCH, AND THE SAMPLE TUBES, ON THE MACHINE ROOM PLANS.
4. INDICATE THE REFRIGERANT MONITOR INTERLOCK ON THE CONTROL DIAGRAM FOR THE MACHINE ROOM VENTILATION SYSTEM.
5. ASSURE THE ELECTRICAL DRAWINGS INDICATE A DEDICATED BREAKER FOR THE REFRIGERANT MONITOR PANEL.

UNIVERSITY OF MICHIGAN
ARCHITECTURE, ENGINEERING AND CONSTRUCTION
ARCHITECTURE & ENGINEERING
326 East Hoover, Mail Stop B
Ann Arbor, MI 48109-1002
Phone: 734-764-3414
Fax: 734-936-3334

Refrigerant_Monitoring_Control_Diagram__

DIVISION: 23
SECTION: 230930
FILE: D_15635_001_08_15.dgn
ISSUE DATE: 08/04/15